THIS DRAWING IS UNPUBLISHED. RELEASED FOR PUBLICATION ,19 .
© COPYRIGHT 19 BY AMP INCORPORATED. ALL RIGHTS RESERVED.

LOC	DIST
G	14

REVISIONS

P	LTR	DESCRIPTION	DATE	DWN	APVD
	G	REV PER 0G3A-0176-02	08APR02	JR	TM

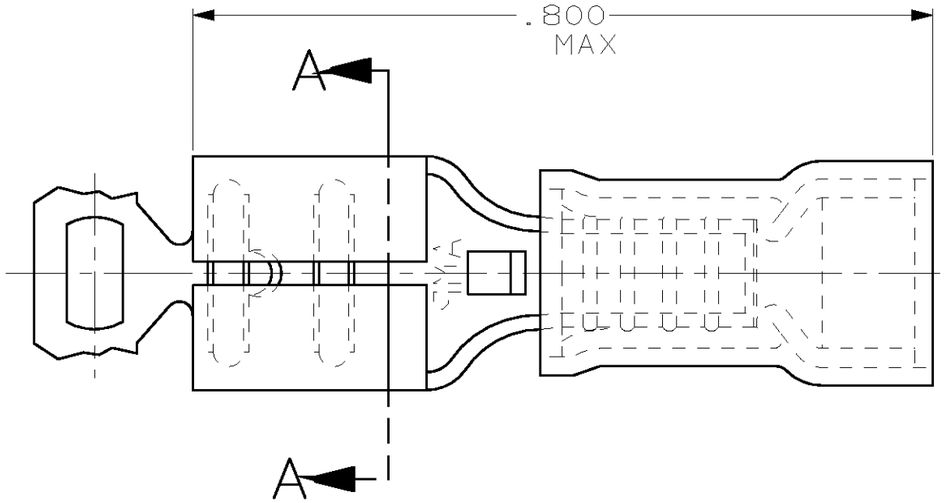

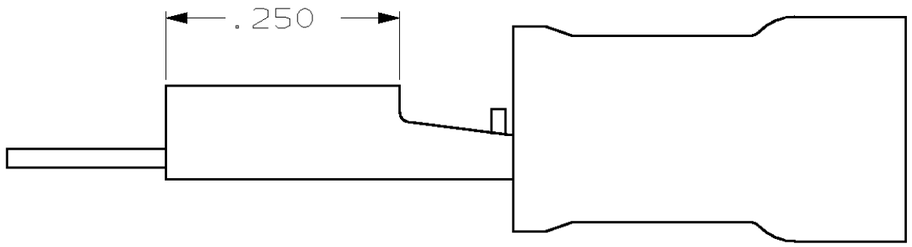

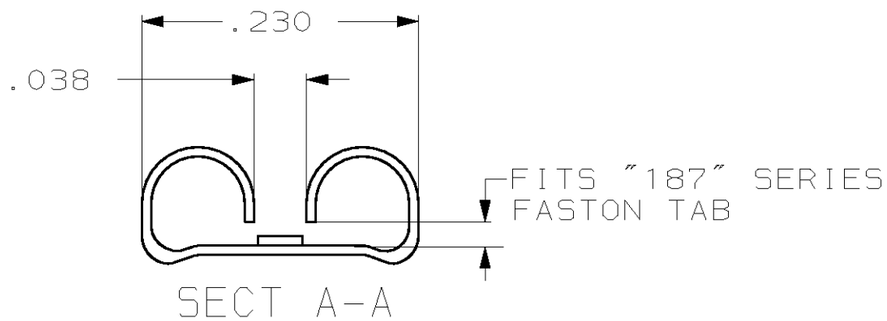

1. INSULATION DIA .170 MAX
2. FITS TAB .020 THK

QTY	PACKAGE TYPE	PART NO
–	–	640918-1

AMP INCORPORATED
CUSTOMER SERVICE SYSTEM

FOR ADDITIONAL PRODUCT INFORMATION OR COPIES OF DRAWINGS AND TECHNICAL DOCUMENTS	PRODUCT INFORMATION CENTER 1-800-522-6752
FOR APPLICATION TOOLING INFORMATION	TOOLING ASSISTANCE CENTER 1-800-722-1111
FOR ORDER ENTRY	1-800-526-5142

MAX RECOMMENDED OPERATING TEMPERATURE: –

VOLTAGE RATING: – –

CIRCULAR MIL AREA: – –

THIS DRAWING IS A CONTROLLED DOCUMENT FOR AMP INCORPORATED. IT IS SUBJECT TO CHANGE AND THE CONTROLLING ENGINEERING ORGANIZATION SHOULD BE CONTACTED FOR THE LATEST REVISION.

DIMENSIONS: INCHES

TOLERANCES UNLESS OTHERWISE SPECIFIED:

0 PLC	±–
1 PLC	±–
2 PLC	±.015
3 PLC	±–
4 PLC	±–
ANGLES	±–

MATERIAL
BODY,BRASS .016
SLV,NYLON,COLOR, BLUE

FINISH
BODY,TIN
–

DWN	L OLMEDA	26JUN95
CHK	M ELLIS	26JUN95
APVD	B BARE	26JUN95
PRODUCT SPEC	–	
APPLICATION SPEC	–	
WEIGHT	–	

AMP Incorporated
Harrisburg, PA 17105-3608

NAME RECEPTACLE, 187 SERIES, FASTON™, PIDG™, WIRE SIZE, 16-14 AWG

SIZE	CAGE CODE	DRAWING NO
A3	00779	C-640918

CUSTOMER DRAWING

SCALE	SHEET	REV
NTS	1 OF 1	G

AMP 1470-19 REV 09MAY94